Product Name

Brixia M

Technical description

Body and pole connection in die-cast aluminum alloy UNI EN 1706 (Low copper content), double painting with polyester powder resistent to the salt fog. Stainless steel screws AISI 304. Tempered sodium-calcic glass, 5 mm thick. Guaranteed 91% transparency. Expanded silicone gaskets. LED light source, colour temperature (4000 K Neutral White).
High coefficient of performance chromatic CRI≥70. PCO optics.

Supply

The driver used offers the best performance, reliability and configuration options in road areas.
Available on request Dimmer and DALI version.
Voltage 220-240 V AC 50 / 60Hz. Operating temperature -40°+50°
Surge protection device: Integrated SPD, 10kV-10kA

Installation

Can be installed with a pole-top or lateral mounting, from 42 mm to 60 mm diameter pole.
Inclination Pole head 0° - 5° - 10° - 15° - 20°.

Control System

ON-OFF: fixed non-dimmable
MV: Automatic dimming (virtual midnight) with default profile
CLO: constant luminous flux
DALI: DALI 2 digital dimmer interface
DI: 1-10V analogue dimmer interface
NEMA: possibility to apply NEMA IP66 connector
ZHAGA: possibility to apply ZHAGA connector

Life

≥100.000 hr L90B10 / ≥ 110.000hr TM21-L70

Applications

Car parks, street, pedastrian areas

Size (mm)

482x243x225

Colour

Dark grey 4

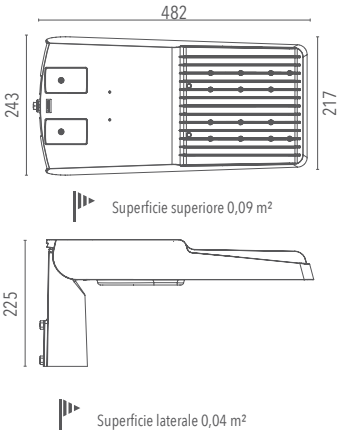

Asym. 55°

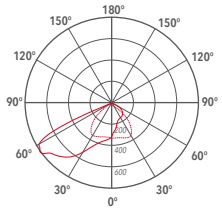

C0 / C180 C90 / C270

IP66 IK09 RG1 U.V. RoHS 5 Kg MAX Low Flicker LED 05

Code	Source	Power	Lm (Output)	Lm (Tc=25°)	Temperature	CRI	Beams	Colour	Control
L0BXM4AH3BL40110	LED	110 W	16402 lm	19360 lm	4000 K	≥70	H3	Dark grey	-
L0BXM4AH3DI40110	LED	110 W	16402 lm	19360 lm	4000 K	≥70	H3	Dark grey	Dimmer
L0BXM4AH3DA40110	LED	110 W	16402 lm	19360 lm	4000 K	≥70	H3	Dark grey	DALI

Accessories

Fast connector
IP 2 poles
LKITA00000000017

Fast connector
IP 3 poles
LKITA00000000003

Fast connector
IP 4 poles
LKITA00000000018

Fast connector
IP 5 poles
LKITA00000000103

Lanzini indicates the luminous flux of the luminaire in the catalogs with a tolerance of ± 10% respect to the indicated value. The total W indicates the total power absorbed by the LED + power supply system that does not exceed 10% of the indicated value.